www.hd-hyundaice.com

HD HYUNDAI CONSTRUCTION EQUIPMENT

Head Office
11F, GLOBAL R&D CENTER, 477 BUNDANG SUSEO-RO, BUNDANG-GU, SEONGNAM-SI, GYEONGGI-DO, 13553, KOREA

PLEASE CONTACT

2023. NOV

HX17AZ / HX19A

With EU Stage V Engine Installed

Engine Gross output (PS/kW)	Operating weight (kg/lbs)
HX17AZ : 16.5(12.1) / HX19A : 16.5(12.1)	HX17AZ : 1,850(4,080) / HX19A(Cabin) : 2,020(4,450)

HD HYUNDAI

WHAT'S NEWEST AND BEST

THE BEST PRODUCTIVITY AND FUEL EFFICIENCY

- EU STAGE V / EPA Tier 4 Final Engine
- True Zero-tail (HX17AZ)
- Quick Coupler piping Option
- Boom swing function
- Long arm Option
- Heavy counterweight Option
- Retractable track & foldable dozer blade
- Double flange track roller

THE ULTIMATE SAFE ENVIRONMENT

- Emergency Engine Stop Switch
- Travel Alarm
- FOG Option
- LED Work Light & Beacon Lamp Option
- Dozer Safety Valve Option
- Anti-theft System

NEW EXTERIOR DESIGN FOR ROBUSTNESS AND SAFETY

- ROPS / FOG Cabin/Canopy Option
- Standard Boom/Arm/Bucket Cylinder Guard NEW
- New Designed Attachment for Durability
- Optimized Hydraulic Layout

SERVICEABILITY AND TELEMATICS

- Hi MATE NEW Option

EASY CONTROL AND COMFORTABLE OPERATION

- Digital Cluster NEW
- Centralized Switch Console
- Proportional joysticks Option
- Proportional Auxiliary Hydraulic System Option
- Pattern Change Valve with Better Accesibility Option
- Improved Visibility
- Auto-Shift Travel Speed

* Photo may include optional equipment.

EU STAGE V / EPA TIER 4 FINAL ENGINE

The new engine meets EU Stage V / EPA Tier 4 Final emission regulations without the need of special exhaust-aftertreatment, resulting in reduced maintenance costs for after-treatment devices.

THE BEST PRODUCTIVITY AND FUEL EFFICIENCY

HX A Series is equipped with eco-friendly, high-performance engines that meet the EU Stage V / EPA Tier 4 final emission requirements.

True Zero-tail (HX17AZ)

HX17AZ eliminates the rear overhang, allowing the excavator to rotate freely within its own footprint. This feature enhances maneuverability and safety while minimizing the risk of damage to surrounding structures.

Quick Coupler piping Option

The HX-A mini excavators are available with a factory-fitted hydraulic line to operate any hydraulic quick coupler. Thus allowing for quick changes of work tools, without having to leave the operator cabin.

Boom swing function

The digging boom attached to the front frame can swing far to either side, thus increasing the machine reach. The front swing mechanism also allows working in difficult spaces (show image with boom swing angle to both sides)

Long arm Option

Several dipper arm length options are available to perfectly adapt the machine for the required job.

Heavy counterweight Option

For increased stability when handling heavy loads the HX-A mini excavators can be fitted with an additional counterweight.

Retractable track & foldable dozer blade

Retractable track and dozer offers versitility and effeciency when operator work in confined space.

Double flange track roller

Double flange track roller provided improved trackalignment, effectively preventing track derailment.

* Photo may include optional equipment.

NEW EXTERIOR DESIGN FOR ROBUSTNESS AND SAFETY

The true value of HX A Series lies in its durability and high productivity.
The robust upper and lower frame structure can endure external shock and heavy work loads.
Attachment performance has been proven through rigorous field testing. No matter how tough the working environment is, you can always rely on the HYUNDAI Excavator HX A Series.

* Photo may include optional equipment.

"We make the best performance in rough working conditions without any unsureness with trustworthy HX17AZ/HX19A"

HX A Series is equipment with eco-friendly,
high-performance engines that meet the EU Stage V emission requirement.
Become a true leader on the ground with HX A Series.

* ROPS Cabin and Canopy

The cabin structure of Hyundai HX A Series is using integrally welded low-stress, high strength steel to meet ROPS and FOG certification.

- **ROPS :** Roll-Over Protective Structures ISO12117-2
- **FOG :** Operator Protective Guard, ISO10262 Option

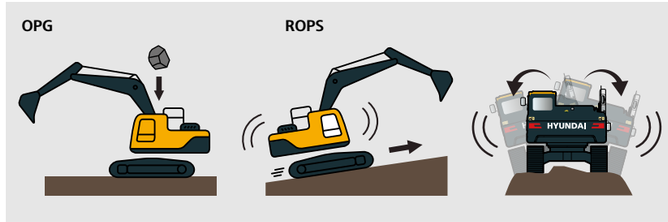

* The cabin option is offered in HX19A only.

Standard Boom/Arm/Bucket Cylinder Guard NEW

We have added new cylinder guards to the boom, arm, and bucket of our excavator to provide increased protection for the hydraulic cylinders. These guards effectively shield the cylinders from damage caused by debris and other external factors, reducing the risk of downtime and costly repairs.

Improved Attachment Durability

Our upgraded attachments are designed to withstand the toughest work environments, featuring reinforced steel components and advanced welding techniques to ensure maximum strength and longevity.

Optimized Hydarulic Hose Layout

Our new boom design ensures enhanced safety, durability, and performance by protecting the hose from collisions and external elements, while providing increased versatility and a cleaner operator workspace.

* Photo may include optional equipment.

EASY CONTROL AND COMFORTABLE OPERATION

Introducing our new Spacious & Comfortable Cabin The cabin has been designed with operator comfort and convenience in mind, with optimized ergonomics and advanced features that allow you to work with greater ease and efficiency. With its spacious interior and high-visibility design, our new cabin offers an unparalleled level of comfort and safety, ensuring that you can work for extended periods without fatigue or discomfort.

Digital Cluster

New 5 inch LCD cluster of HX-A mini excavators allow you to easily control excavator setting - like Aux. flow rate adustment. Our digital cluster also offers features for component lifecycle management and daily operation time management.

Centralized Switch Console

HX-A mini excavators's console features a centralized layout with intuitive switches and controls that allow you to easily and quickly access all critical functions and operations.

Proportional Auxiliary Hydraulic System Option

Proportional control switch with better speed control helps operators to enlarge the operation convenience whenever they do time-consuming work.

Pattern Change Valve Option

HX-A mini excavators now feature a pattern change valve conveniently located below cabin rubberr pad, allowing for easy accessibility and operation.

Improved Visibility

Experience a whole new level of visibility with our latest cabin design. Our engineers have worked tirelessly to enhance the visibility from the cabin, providing you with a wider and more expansive field of view. The new design allows for better sightlines in all directions, giving you a clear and unobstructed view of your surroundings.

Auto-Shift Travel Speed

The auto shift travel speed feature on our excavator allows for seamless transitioning between high and low travel speeds, improving overall efficiency and productivity on the job site. This automated feature allows the operator to focus on the task at hand while the machine takes care of speed adjustments.

THE ULTIMATE SAFE ENVIRONMENT

The true value of HX A Series lies in its durability.
The robust frame structure and the attachments show the real value of HX A Series in tough working environments and promise higher productivity.

> HX17AZ/HX19A with advanced technology ensures our safety on a construction site.

Emergency Engine Stop Switch

With just a push of a button, the engine will immediately shut off, ensuring the safety of the operator and those around the machine.

Travel Alarm

The alarm emits a loud and distinct sound to notify nearby workers and pedestrians, reducing the risk of accidents and ensuring compliance with industry safety regulations.

Work light & Beacon lamp Option

HX-A mini excavators are equipped with powerful LED worklights & beaconlamp that provide excellent visibility in low-light conditions, ensuring safe and efficient operation at any time of day or night.

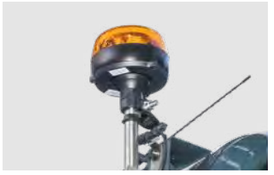

Dozer Safety Valves Option

The HX-A mini excavators is equipped with safety valve on dozer cylinder, which automatically activate in the event of hydraulic hose damage or loss of pressure to prevent sudden drops.

Anti-theft System Option

The system includes a password-protected ignition key to prevent the engine from starting without the correct key. Additionally, there is an optional GPS tracker (Hi MATE) available that allows you to quickly locate the machine in case of theft.

* Photo may include optional equipment.

SERVICEABILITY AND TELEMATICS

IoT / ICT / AI-based digital technology.
Creating a smart construction site. Maximizes connectivity, productivity, and safety for successful businesses.

* Photo may include optional equipment.

Hi MATE Option

IT'S CONVENIENT, EASY AND VALUABLE

Hi MATE Hyundai's newly developed remote management system, utilizes GPS-satellite technology to provide customers with the highest level of service and product support available. Hi MATE enables users to remotely evaluate machine performance, access diagnostic information, and verify machine locations at the touch of a button.

WHAT IS BENEFITS

Increase Productivity

It helps you operate machines in efficient. You can check the difference between total engine hours and actual working hours. See how productive your machines are and plan any required cost saving solutions. Hi MATE offers working information such as working / idling hours, fuel consumption and rate.

Convenient and Easy Monitoring

There is nothing much to do to monitor your machines. Just log on to the Hi MATE website or mobile application. Hi MATE allows you to watch your machines whenever and wherever you are.

Security

Protect your machines from theft or unauthorized usage with Hi MATE. If the machine moves out of the Geo-fence boundary, you will get alerts.

Mobile Fleet App. Option

The new Mobile App is optimized to fleet management. It provides productivity, health insights based on telematics technology and enables fleet owner just focus on most wanted equipment in view of economical usage, utilization, fault codes and maintenance.
The new Mobile App sorts equipment in order of eco-index, utilization-index and fault code level automatically so that urgent equipment pops up automatically.

Hi MATE Fleet App

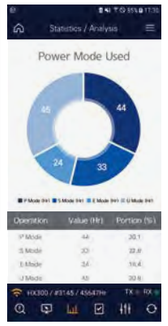

HCE-DT AIR App

HX17AZ / HX19A

SPECIFICATIONS

Unit : mm (ft·in)

SPECIFICATIONS			
Model		HX17AZ	HX19A
Operating weight	kg(lbs)	1,850(4,080)	1,885(4,160) / 2,020(4,450)
ENGINE			
Manufacturer		Kubota	Kubota
Model		D902	D902
Type		Vertical, water cooled 4-cycle IDI diesel engine	Vertical, water cooled 4-cycle IDI diesel engine
Emission standard		Tier 4 Final / Stage V	Tier 4 Final / Stage V
Gross	PS(kW)/rpm	16.5(12.1) / 2,400	16.5(12.1) / 2,400
Net	PS(kW)/rpm	16.2(11.9) / 2,400	16.2(11.9) / 2,400
Peak torque	N·m(lb·ft)	54.6(40.3)	54.6(40.3)
No. of cylinder		3	3
Bore x Stroke	mm(in.)	72(2.83") x 73.6(2.90")	72(2.83") x 73.6(2.90")
Displacement	cc(in^3)	898(54.8)	898(54.8)
HYDRAULIC SYSTEM			
Pump type		Variable displacement tandem axis piston pumps	Variable displacement tandem axis piston pumps
Max. pressure	kgf/cm^2(psi)	210(2,990)	210(2,990)
Max. flow rate	l(gal)/min	2 x 17.3(4.5) + 10.4(2.7)	2 x 17.3(4.5) + 10.4(2.7)
Aux. flow rate (2way)	l(gal)/min	27.7(7.3)	27.7(7.3)
Fuel tank capacity	kgf/cm^2(psi)	19.5(5.2)	21.3(5.6)
Hydraulic tank capacity	l(gal)	12.1(3.2)	20(5.3)
Bucket digging force (ISO)	kgf(lbf)	1,664(3,668)	1,664(3,668)
Arm digging force (ISO)	kgf(lbf)	933(2,057)	933(2,057)
Travel speed (high/low)	km(mile)/h	4.1(2.6) / 2.2(1.4)	3.7(2.3) / 2.1(1.3)
Traction force	kg(lb)	1,420(3,130)	1,441(3,180)
Swing speed	rpm	9.2	9.2
Boom length	mm(ft.)	1.75(5.74)	1.75(5.74)
Arm length	mm(ft.)	1.03(3.38) / 1.23(4.04)	1.03(3.38) / 1.23(4.04)
Bucket capacity, std. SAE	m^3(yd^3)	0.04(0.05)	0.04(0.05)
Bucket width (with/without sidecutter)	mm(in.)	382(15") / 422(16.6")	382(15") / 422(16.6")
Boom swing angle		LH 44° / RH 69°	LH 55° / RH 59°
Rubber track width	mm(ft.)	230(9")	230(9")
Ground pressure	kgf/cm^2(psi)	0.31(4.38)	0.31(4.38)
Noise level			
LpA / LwA (2000/14/EC)	dB	92 / N/A	92 / 75.3

* All equipment dimension is based on standard boom/arm and counterweight.

HX17AZ / HX19A

WORKING RANGE & DIMENSION

HX17AZ/HX19A DIMENSIONS

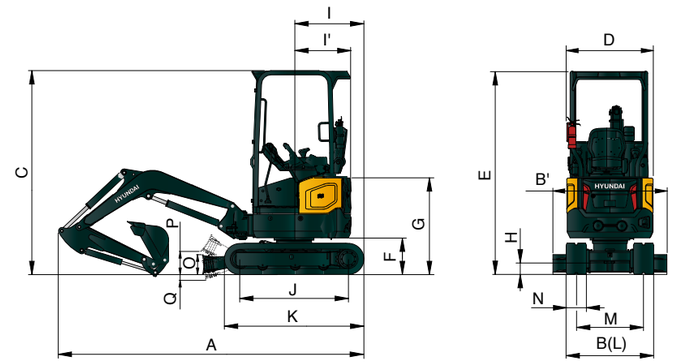

Unit : mm (ft·in)

		HX17AZ	HX19A
	Operating weight (Canopy/Cabin)	1,850(4,080)	1,885/2,020(4,160/4,450)
A	Overall length	3,531 (11' 6")	3,837 (12' 7")
B	Overall width	994 ~ 1290 (3' 3" ~ 4' 3")	994 ~ 1290 (3' 3" ~ 4' 3")
C	Overall height	2,320 (7' 7")	2,275 (7' 6")
D	Overall width of upperstructure	980 (3' 3")	980 (3' 3")
E	Overall height of cab	2,320 (7' 7")	2,275 (7' 6")
F	Ground clearance of counterweight	415 (1' 4")	415 (1' 4")
G	Overall height of engine hood	1,095 (3' 7")	1,240 (4' 1")
H	Minimum ground clearance	150 (0' 6")	150 (0' 6")
I	Rear-end distance	645 (2' 1")	1,065 (3' 6")
I'	Rear-end swing radius	645 (2' 1")	1,065 (3' 6")
J	Distance between tumblers	1,230 (4' 0")	1,230 (4' 0")
K	Undercarriage length (without grouser)	1,580 (5' 2")	1,580 (5' 2")
L	Undercarriage width	994 ~ 1290 (3' 3"~4' 3")	994 ~ 1290 (3' 3"~4' 3")
M	Track gauge	764 ~ 1060 (2' 6"~3' 6")	764 ~ 1060 (2' 6"~3' 6")
N	Track shoe width, standard	230 (0' 9")	230 (0' 9")
O	Height of blade	225 (0' 9")	225 (0' 9")
P	Ground clearance of blade up	183 (0' 7")	183 (0' 7")
Q	Depth of blade down	222 (0' 9")	222 (0' 9")

Unit : mm (ft·in)

HX17AZ/HX19A WORKING RANGE

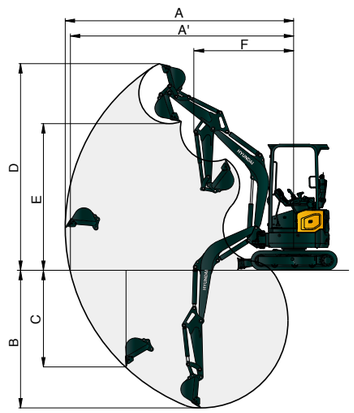

	momel	HX17AZ	HX19A
A	Max. digging reach	3,910 (12' 10")	3,940 (12' 11")
A'	Max. digging reach on ground	3,820 (12' 6")	3,850 (12' 8")
B	Max. digging depth	2,240 (7' 4")	2,340 (7' 8")
B'	Max. digging depth (8' level)	1,600 (5' 3")	1,740 (5' 9")
C	Max. vertical wall digging depth	1,750 (5' 9")	1,840 (6' 0")
D	Max. digging height	3,730 (12' 3")	3,470 (11' 5")
E	Max. dumping height	2,670 (8' 9")	2,440 (8' 0")
F	Min. swing radius	1,580 (5' 2")	1,725 (5' 8")

HX17AZ / HX19A

LIFTING CAPACITY

Rating over-front Rating over-side or 360 degree

HX17AZ

Boom : 1.75 m (5' 9") / Arm : 1.03 m (3' 5") / Dozer blade up : 230mm(9") rubber track

Lift-point height (m/ft)		Lift-point radius						At max. reach		
		2.0 m (6.6 ft)		2.5 m (8.2 ft)		3.0 m (9.8 ft)		Capacity		Reach
										m (ft)
3.0m	kg	*390	*390					*410	*410	2.18
9.8 ft	lb	*860	*860					*900	*900	(7.2)
2.5m	kg			*370	360			320	300	2.74
8.2 ft	lb			*820	790			710	660	(9.0)
2.0m	kg	*380	*380	370	350	270	260	260	250	3.07
6.6 ft	lb	*840	*840	820	770	600	570	570	550	(10.1)
1.5m	kg	*510	490	360	340	270	260	230	220	3.27
4.9 ft	lb	*1,120	1,080	790	750	600	570	510	490	(10.7)
1.0m	kg	490	460	350	330	260	250	220	210	3.36
3.3 ft	lb	1,080	1,010	770	730	570	550	490	460	(11.0)
0.5m	kg	470	440	340	320	260	250	220	210	3.36
1.6 ft	lb	1,040	970	750	710	570	550	490	460	(11.0)
0.0m	kg	460	430	330	310	250	240	230	220	3.26
0.0ft	lb	1,010	950	730	680	550	530	510	490	(10.7)
-0.5m	kg	450	420	330	310	250	240	250	240	3.05
-1.6 ft	lb	990	930	730	680	550	530	550	530	(10.0)
-1.0m	kg	460	430	330	310			300	280	2.70
-3.3 ft	lb	1,010	950	730	680			660	620	(8.9)
-1.5m	kg	470	440					*430	410	2.11
-4.9 ft	lb	1,040	970					*950	900	(6.9)

HX19A - CANOPY

Boom : 1.75 m (5' 9") / Arm : 1.03 m (3' 5") / Dozer blade up : 230mm(9") rubber track

Lift-point height (m/ft)		Lift-point radius						At max. reach		
		2.0 m (6.6 ft)		2.5 m (8.2 ft)		3.0 m (9.8 ft)		Capacity		Reach
										m (ft)
2.5m	kg			*370	*370			*350	350	2.77
8.2 ft	lb			*820	*820			*770	770	(9.1)
2.0m	kg			*380	*380	320	310	300	290	3.10
6.6 ft	lb			*840	*840	710	680	660	640	(10.2)
1.5m	kg	*510	*510	420	400	320	300	270	260	3.30
4.9 ft	lb	*1,120	*1,120	930	880	710	660	600	570	(10.8)
1.0m	kg	570	540	410	390	310	300	260	250	3.39
3.3 ft	lb	1,260	1,190	900	860	680	660	570	550	(11.1)
0.5m	kg	550	510	400	380	300	290	250	240	3.39
1.6 ft	lb	1210	1,120	880	840	660	640	550	530	(11.1)
0.0m	kg	530	500	390	370	300	290	260	250	3.29
0.0ft	lb	1,170	1,100	860	820	660	640	570	550	(10.8)
-0.5m	kg	530	500	380	360	300	290	290	280	3.08
-1.6 ft	lb	1,170	1,100	840	790	660	640	640	620	(10.1)
-1.0m	kg	540	510	390	370			340	330	2.73
-3.3 ft	lb	1,190	1,120	860	820			750	730	(9.0)
-1.5m	kg	*500	*500					*430	*430	2.14
-4.9 ft	lb	*1,100	*1,100					*950	*950	(7.0)

| 1 | Lifting capacity are based on ISO 10567.
| 2 | Lifting capacity of HX Series does not exceed 75% of tipping load with the machine on firm, level ground or 87% of full hydraulic capacity.
| 3 | The Lift-point is bucket pivot mounting pin on the arm(without bucket mass).
| 4 | (*) indicates load limited by hydraulic capacity.

Unit : mm (ft·in)

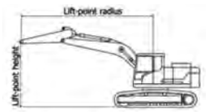

HX17AZ / HX19A

STANDARD / OPTION

● : Standard / ○ : Option

ENGINE

Model	HX17AZ	HX19A
Mechanical controlled Kubota engine	●	●
Double-element air filter	●	●
Water seperator with filter	●	●

HYDRAULIC SYSTEM

Open center hydraulic system	●	●
Two-speed travel with auto-shift	●	●
Pressure accumulator	●	●
Proportional Aux. control	○	○
1 way Aux. hydraulic line for breaker	●	●
2 way Aux. hydraulic line for grapple	○	○
Adjustable Aux. flow on cluster	●	●
Pattern change valve	○	

CABIN & CANOPY

Canopy	●	●
Cabin with heater		○
ROPS (Roll-over Protective structure, ISO3471)	●	●
OPS (Operator Protective Guard) Level 1	●	●
FOG Guard	○	○
Adjustable Mechanical Suspension Seat	●	●
Travel levers	●	
Travel levers with foot pedals		●
Emergency hammer for exit		●
Power-assisted front window		○
Travel alarm	●	●
LED beacon lamp	○	○
5" Digital cluster with IP68 water & dust proof	●	●
Radio with USB		○
12V power socket	●	●
Side & Rear Mirrors		●
Cup holder	●	●
Horn	●	●

WORKING EQUIPMENT

Zero-tail	●	
Boom swing function	●	●
Arm with thumb bracket	○	○
Long arm option	○	○
Hyundai quick coupler	○	○
Quick coupler piping	○	○
Additional counter weight option	○	
Safety valves for Dozer	○	○
Travel & Swing motor with dics brake	●	●
1 halogen work light on boom	●	●
1 LED work light on boom	○	○
2 LED work lights on cabin		○

UNDERCARRIAGE

Model	HX17AZ	HX19A
Retractable undercarriage with foldable dozer	●	●
Rubber track	●	●
Hi-Mate	○	○

* Standard and optional equipment may vary. Contact your Hyundai dealer for more information. The machine may vary according to International standards.
* The photos may include attachments and optional equipment that are not available in your area.
* Materials and specifications are subject to change without advance notice.
* All imperial measurements rounded off to the nearest pound or inch.

MEMO